ASEA

Information YL 718-201 E

New multi-colour graphic display system

TESSELATOR with improved legibility

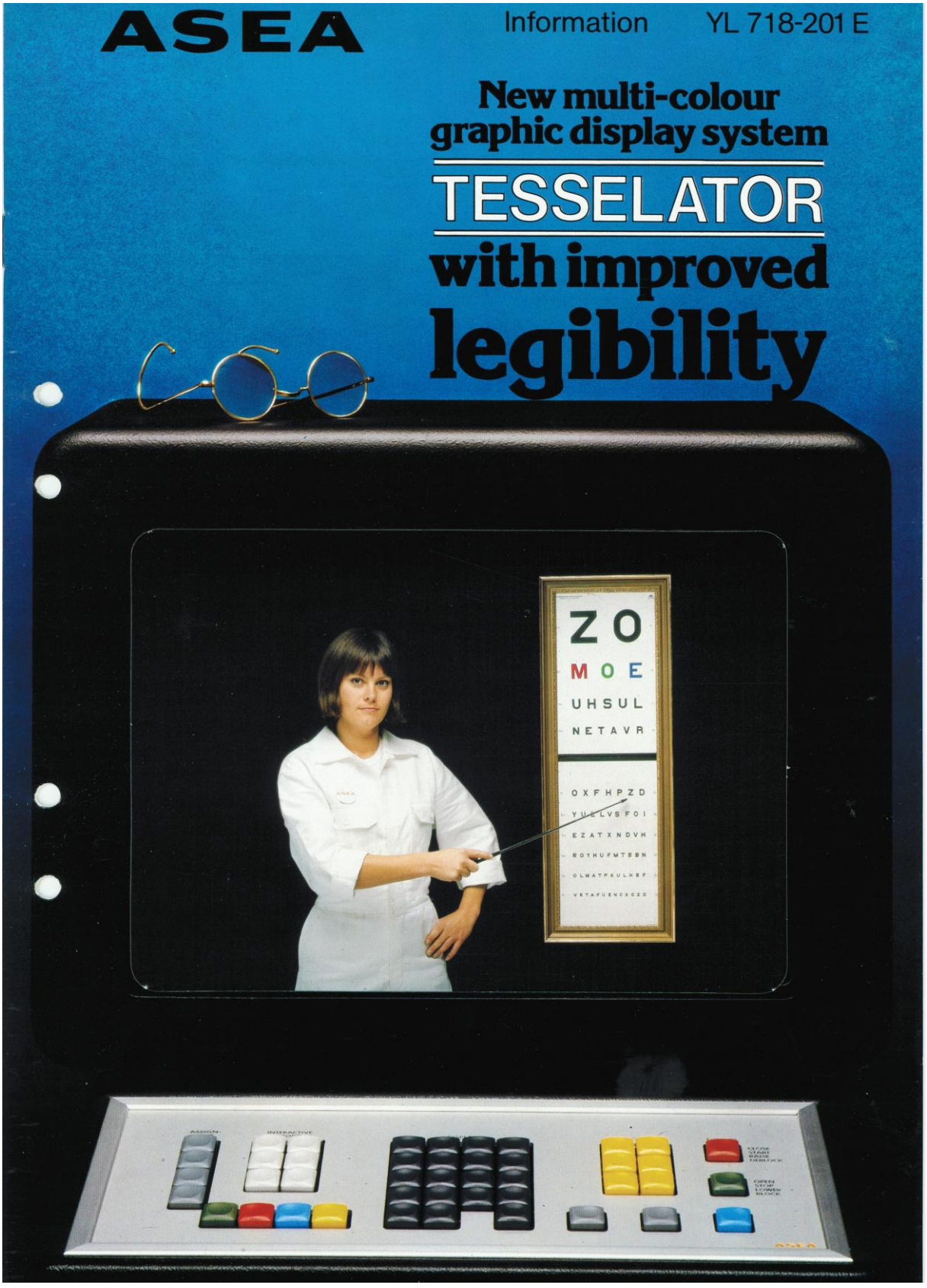

The obvious

A considerable variation in the sizes of characters is encountered in the enormous amount of printed matter now in circulation. Large size characters are used for reasons of legibility and small size characters when a great deal of information is to be crammed into a limited space. The smaller the characters the more difficult to read the text will be. This commonly known fact is utilised by opticians and eye specialists when testing a person's eyesight.

A daily newspaper that has all characters printed the same size would be considered monotonous and boring by most people. Consequently such newspapers are few and far between. In the case of visual display units, however, one size of character is generally accepted.

The reason for this is quite simple: up to now, no satisfactory method has existed for combining characters of different sizes. Double-width and double-height characters could be formed but these resulted in inefficient utilisation of the screen space available.

Legibility implies that the display characters and symbols have some meaning for the reader. Chinese characters are just one example of what can be achieved with ASEA's new multi-colour display equipment.

Fig. 1. The Chinese expression for colour (in two sizes) as displayed on ASEA's multi-colour screen.

On a given surface a small text size
provides a large information content, while
a large text size
ensures improved
legibility

Fig. 2. Legibility is improved as the size of the characters increases. It is further improved if capital and lower-case letters can be mixed.

On a given surface a small text size
provides a large information content, while
a large text size
ensures improved
legibility

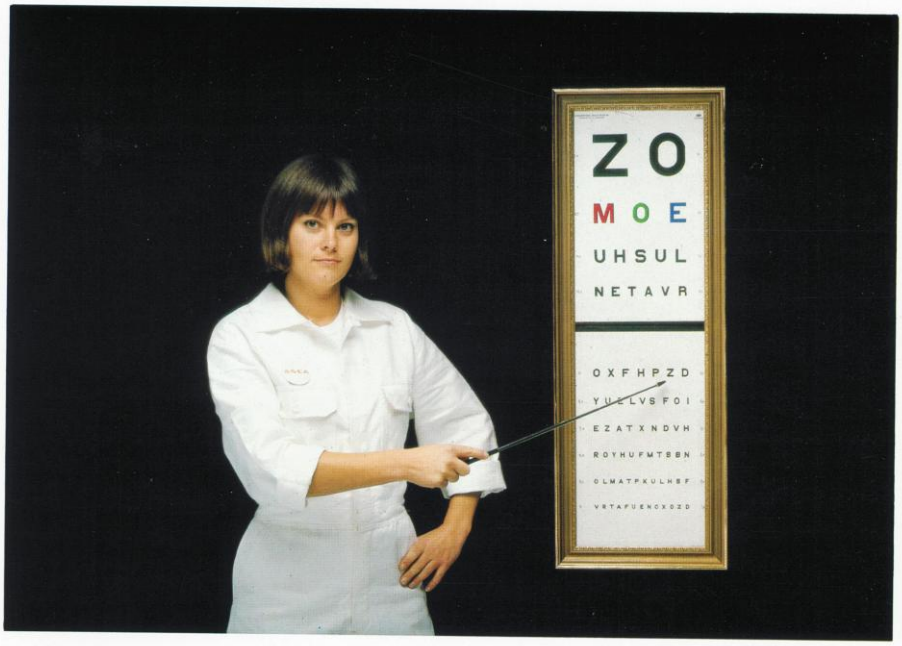

Fig. 2. Legibility is improved as the size of the characters increases. It is further improved if capital and lower-case letters can be mixed.

The paradoxical

ASEA's multi-colour screen incorporates a newly developed character generator which combines the best of two worlds. Large or capital characters can be intermingled with small or lower-case characters. The size and shape of the characters can be selected at will. Large characters are used for important information such as measured values or for nodes in graphical presentations. Small characters are used for quantities which do not change or for closely grouped items such as bunches of cables. The characters and symbols can be easily adapted to comply with applicable standards and draughtman's rules. It can be clearly seen from the illustrations that increasing the legibility of the text does not reduce the amount of information given – a seeming paradox!

Figs. 3–6. ASEA's multi-colour display units enable important and variable data to be presented with large-size characters. Compare the smaller illustrations in which the symbols are formed by conventional type character generators.

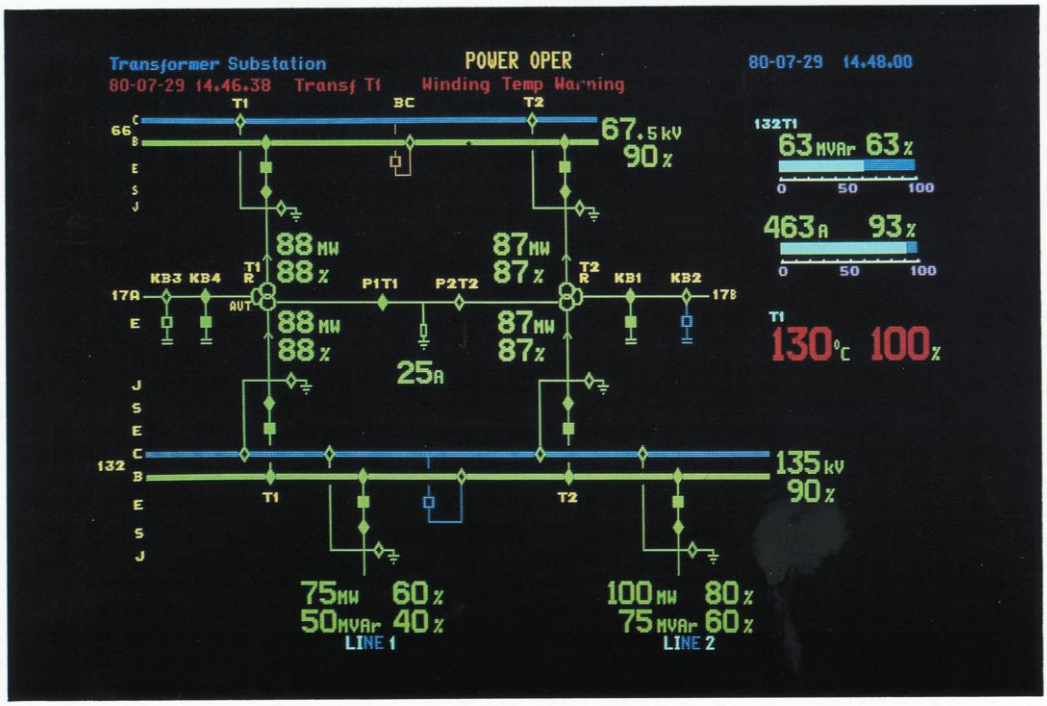

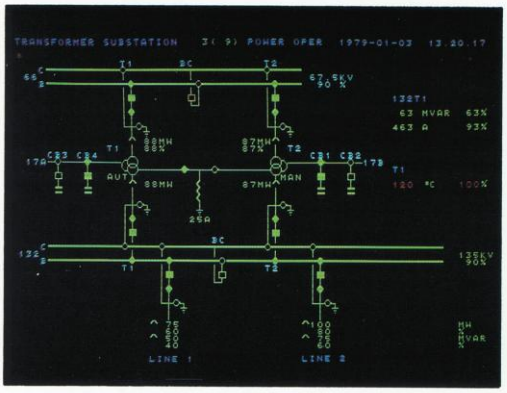
TRANSFORMER SUBSTATION 3(9) POWER OPER 1979-01-03 13.20.17
LINE 1
LINE 2

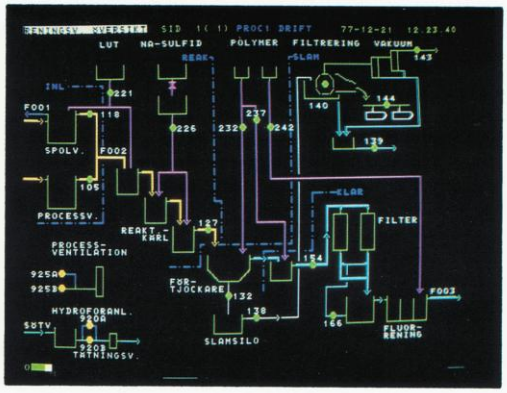
LUT
NA-SULFID
POLYMER
FILTRERING
VAKUUM
SPOLV.
PROCESSV.
PROCESS-VENTILATION
FILTER
SLAMSILO
FLUOR-RENING

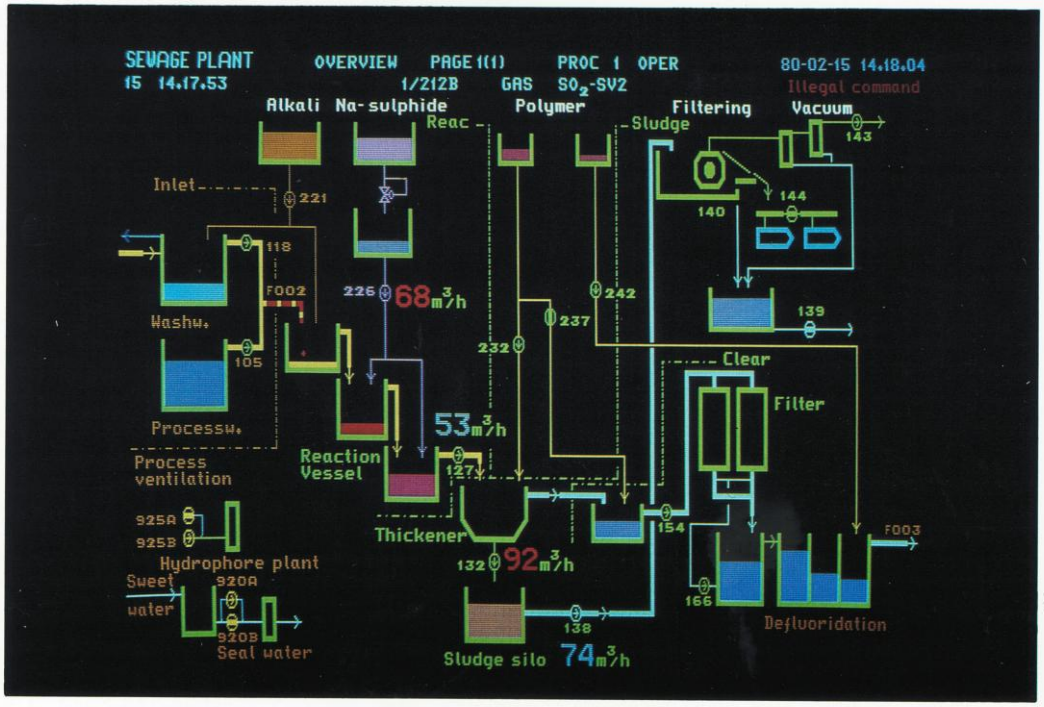
SEWAGE PLANT
15 14.17.53
OVERVIEW PAGE 1(1)
1/212B GAS SO2-SV2
PROC 1 OPER
80-02-15 14.18.04
Illegal command
Alkali
Na-sulphide
Reac
Polymer
Sludge
Filtering
Vacuum
Inlet
Washw.
Processw.
Process ventilation
Reaction Vessel
Thickener
Clear
Filter
Hydrophore plant
Sweet water
Seal water
Sludge silo
Defluoridation
68m3/h
53m3/h
92m3/h
74m3/h

The unique

With ASEA's new display unit it is quite a simple matter to create graphic diagrams. The operator can quickly compose a diagram directly from the keyboard without the use of a computer. This easy build-up of diagrams has been made possible by a unique method developed at ASEA. Logical nodes are assigned graphic symbols and these nodes are the logical points of connection for points with other symbols. For this reason, the operator need not worry about the sizes of the symbols; when one symbol has been written the cursor moves automatically to the next writable position.

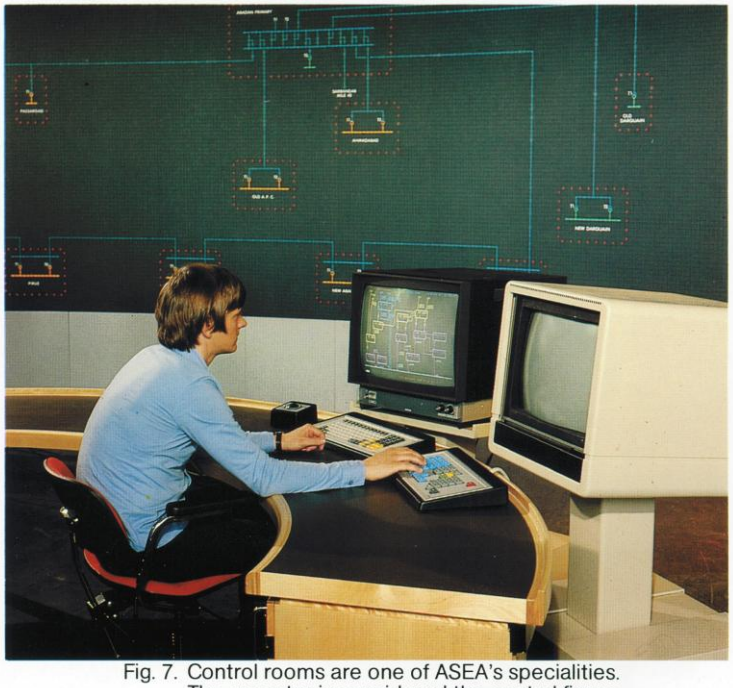

Fig. 7. Control rooms are one of ASEA's specialities. The operator is considered the central figure and around him is built up the ergonomically designed control room interior which also includes the computer software. The illustration shows, amongst other things, ASEA's portable low-profile keyboard. The example on the right shows that diagrams can also be created directly from the keyboard.

Procedure for generating diagrams (example)	Key depressed (Operator's action)	Resulting display (Previous cursor position shown dotted)
Select direction of writing (to the right). Select symbol size and symbol. Keep the key depressed until the line is of the required length (automatic repeat).	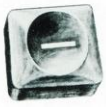	Cursor
Select symbol (three-winding transformer). If another size of symbol is required, this must be selected first at each stage.		The cursor moves automatically to the logical node.
Select symbol (a stretch of line). In this case too, the length is determined by automatic repeat.		
Select symbol.		
Select another direction for writing (downwards). The cursor moves automatically to the logical node for the changed direction of writing.		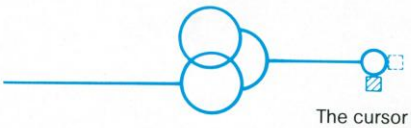 The cursor moves automatically to the logical node.

Data

- Graphic colour-display unit
- Four orthogonal writing directions
- Different symbol sizes can be used together in the same diagram to increase legibility
- 896 characters/symbols stored in RWM/PROM
- 16 foreground colours and 8 background colours can be individually selected for each symbol
- General background colour or black background
- Two blink frequencies enable a large number of combinations of rapid, slow and intermittent blinks in both the foreground and background
- Connection via high-speed serial communication link
- Two or four computer interfaces
- Interfaces for up to four keyboards and other interactive devices.
- Highly efficient editing functions including tabulating and window functions
- Up to 68 rows and 120 characters/row when using the smallest size of characters
- Draughting of both thin and thick lines
- Presentation of trend curves with up to 16 curves and a resolution better than 0.5%
- Three mutually independent display channels can be obtained with one and the same control unit. The control unit can also be made to act as a buffer to other connected units, e.g. typewriters.
- Flicker-free, dynamic updating of individual positions.
- Zoom function enables quadrupled enlargement of any part of the display.
- Grey-scale output (for hard copy units or black/white monitors)
- ASEA's ergonomically-designed interactive units with low-profile keyboards and trackball can be connected directly.
- Function codes for sending orders to the computer can be issued via the control unit without affecting the presentation on the display unit.
- 3 versions of the monitor with different numbers of lines
- Modular electronics. The individual boards are designed and documented to make replacement simple. LED indicators facilitate servicing. Diagnostic functions are incorporated to allow trouble shooting at three levels; supervising, control and individual fault location.

Note. The system name TESSELATOR is based on the term "tessellation", which means a careful juxtaposition of elements into a coherent pattern or mosaic.

ASEA
Electronics Division
S-72183 VÄSTERÅS, SWEDEN
Tel. +46 21 100000

Information YL 718-201E Edition 1

Printed in Västerås, Sweden 1982-11 VLT-PRESS 5969 5000/4 + 3000